ZENITH 32 NDIX

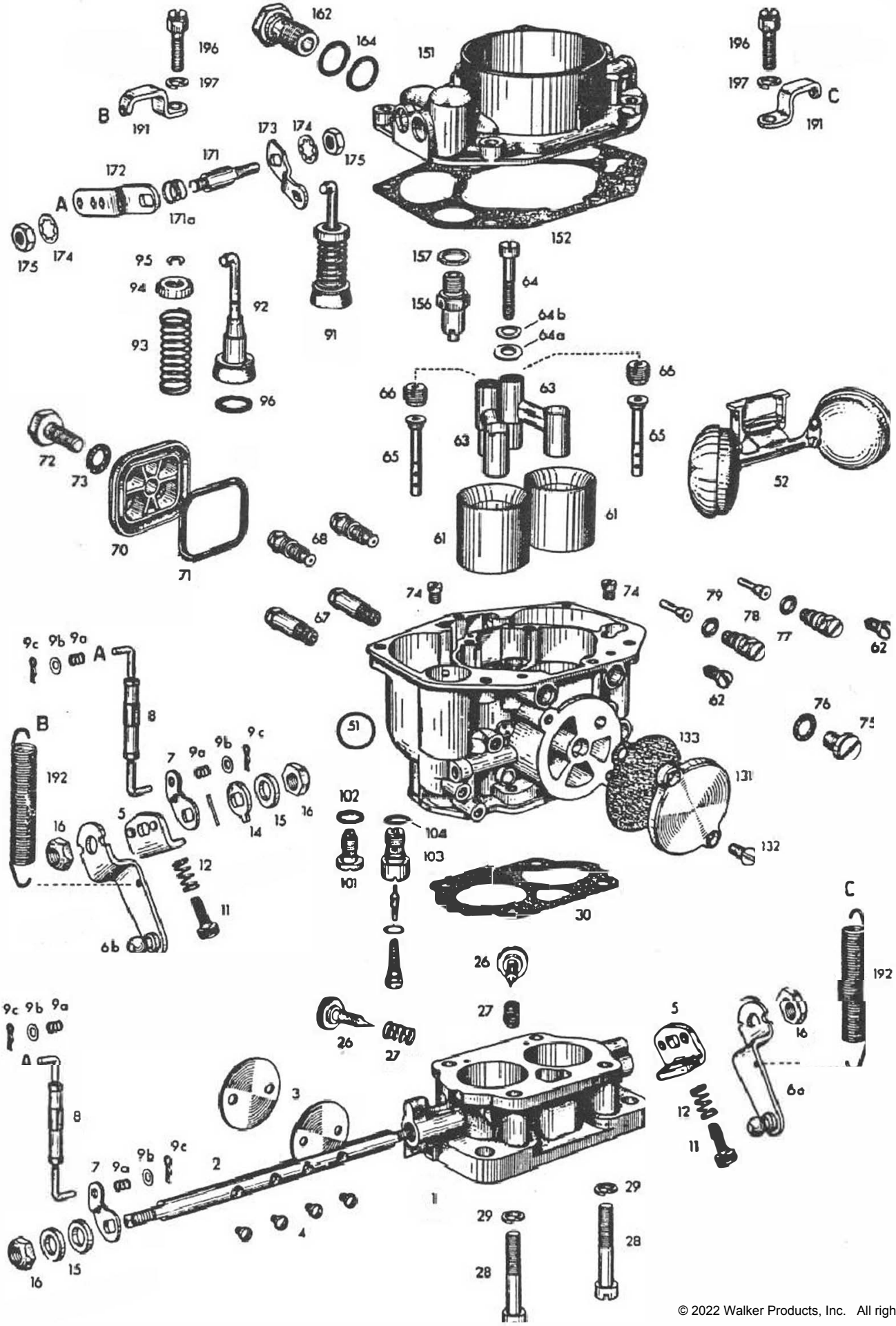

© 2022 Walker Products, Inc. All rights reserved.